GUERRA

Tel.: +34 986 58 20 00
Fax: +34 986 58 22 91

Avda. Benigno Sánchez s/n
36590 VILA DE CRUCES
(Pontevedra) - Spain

www.iguerra.com
info@iguerra.com

Capture to contact

In favour of improving our products, INDUSTRIAS GUERRA reserves the right to make whatever modifications it considers appropiate without prior notice.
ED. 06/2018

GUERRA

83N

Hydraulic cranes

FORESTRY

83N

DIMENSIONS

83N.077.1

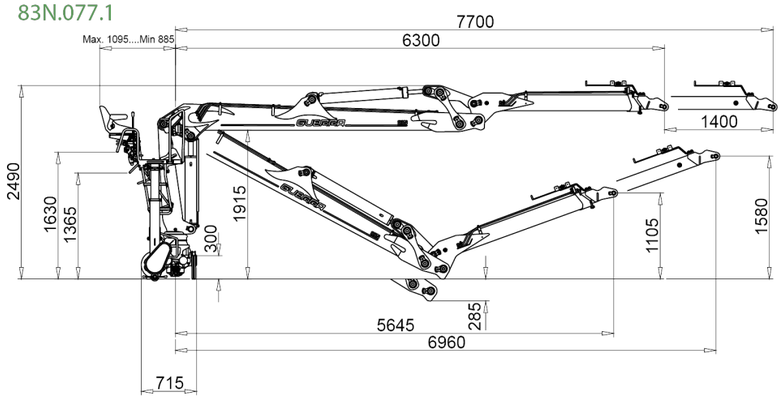

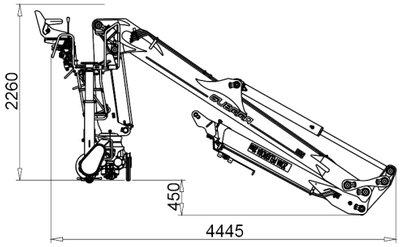

* *opcional columna alta,* optional, higher king post +150 mm 83ND

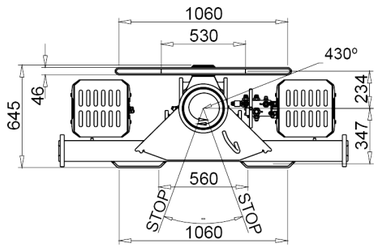

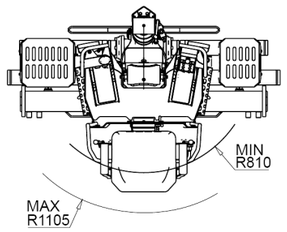

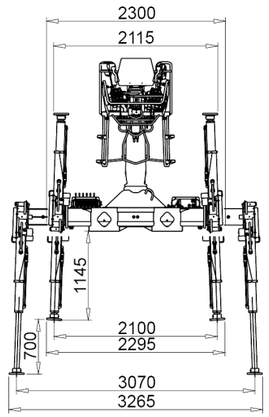

83N.082.1

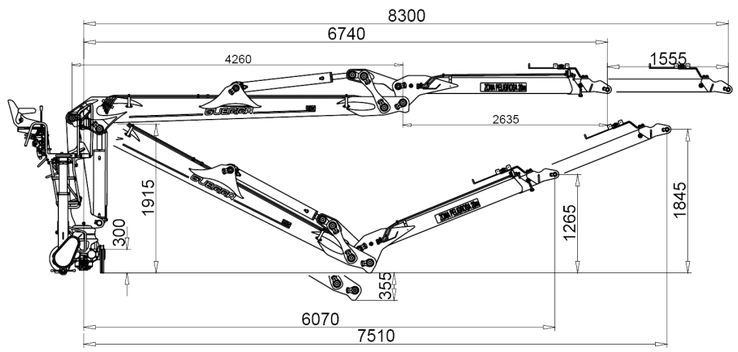

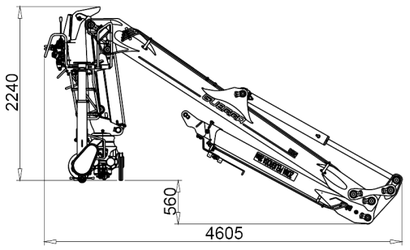

TECHNICAL DATA

		83N.077.1	83N.082.1
MAXIMUM LIFTING CAPACITY	[kNm]	82.3	76.4
MAXIMUM HYDRAULIC OUTREACH	[m]	7.7	8.3
GROSS SLEWING TORQUE	[kNm]	20.0	20.0
SLEWING ANGLE	[º]	421	421
MAXIMUM WORKING PRESSURE	[bar]	240	240
MAXIMUM OIL FLOW	[l/min]	80/2x60	80/2x60
MASS OF STANDARD CRANE	[Kg]	1975	2158

DATA

- Built according "EN 12999" rule H1-B4 class
- 4 slewing cylinders and double rack
- Wheel-rack slewing system, in oil bath, with oscillant roller bearings
- New control position, ergonomic, easy of access
- Hydraulically extensible and manually gyratory outriggers
- Pre- intallation of 4- function point accesory control
- New transport position.

OPTIONAL

- Control valve with fixed or variable flow.
- Hydraulically giratory outriggers.
- More resistant outriggers (guided).
- Heat exchanger.
- Set of headlights.

POSITIONS DIAGRAM

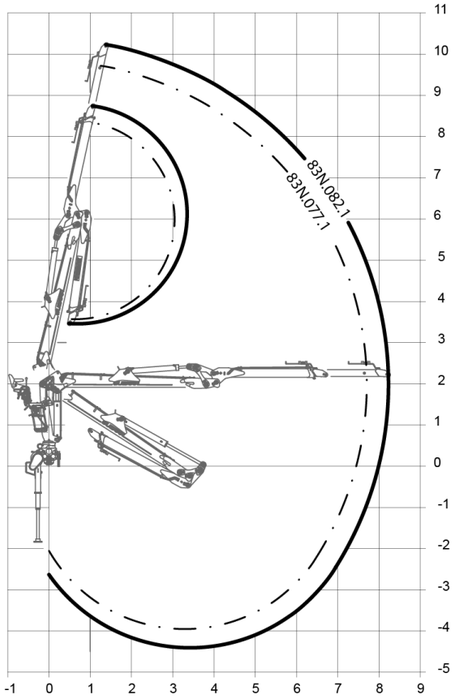

LOAD DIAGRAM

83N.077.1 — 83N1

2860 Kg	1890 Kg	1410 Kg	1100 Kg
3.0 m	4.5 m	5.9 m	7.3 m

83N.082.1 — 83NHQV1

2680 Kg	1770 Kg	1215 Kg	960 Kg
3.0 m	4.5 m	6.4 m	7.9 m